SC-422

Cinema Loudspeaker System

Features

- 2-way, bi-amplified screen channel system
- HF-75 provides 90° horizontal by +20° to -30° vertical coverage
- LF-4215 is constructed of MDF and features single woofer chambers
- Low-distortion waveguide provides highly articulate dialogue
- Shallow depth (20") facilitates installation
- THX™ approved for professional cinema applications

Developed specifically for the unique requirements of professional motion picture playback, the SC-422 extends QSC's commitment to the cinema market. As a member of the DCS Digital Cinema Speaker Series, the SC-422 is a 2-way, bi-amplified screen channel loudspeaker system comprised of two main units—the HF-75 high-frequency system and the LF-4215 low-frequency system.

The HF-75 high-frequency system features a large format, 3" (75mm) titanium diaphragm compression driver mounted on a custom designed high-frequency cinema horn with an adjustable pan and tilt bracket. The HF-75 includes a driver protection and equalization network. DC blocking capacitors protect against DC or low-frequency signals that would likely destroy an unprotected driver. Power limiter circuitry protects the driver from overpowering and a response correction filter smoothes the frequency response of the horn/driver combination. The driver and equalization network provides for more reliable operation, ensuring the show will go on.

The LF-4215 dual 15" (381mm) low-frequency enclosure is designed specifically to address the extended low-frequency response required for cinema applications. The LF-4215 covers the frequency range from 35 Hz to 1000 Hz, depending upon the high-frequency system requirements. Close Coupled Woofers (CCW), with their tight spacing between woofers, improves coupling and keeps coverage angles wide over a greater frequency range than more widely spaced designs.

The SC-422 is designed for ease of installation. The HF-75 components come pre-assembled to reduce field assembly time. Three bolts are all that are required to secure the HF-75 to the top of the LF-4215 enclosure.

Specifications

	SC-422	
Nominal Coverage	90° horizontal x +20 to -30° vertical	
Frequency Range	38 Hz – 16 kHz (-6 dB)	
Crossover Frequency	700 Hz, 24 dB per octave	
	LF-4215	**HF-75**
Impedance	4Ω	8Ω
Sensitivity 1 watt/1 meter, half space	99.5 dB	107.5 dB
Maximum Input Power[1]		
8 hours of 6 db crest factor IEC 268 noise spectrum	800 W RMS	60 W RMS
2 hours of 6 db crest factor pink noise, 50 Hz – 20 kHz, AES method	1000 W RMS	80 W RMS
Recommended Amplifier Power	1600 W RMS maximum	100 W RMS maximum
Recommended Processing	Subsonic filter below 30 Hz, > 18 dB per octave	4th order LR crossover at 1000 Hz
Connectors	Barrier strip screw terminals accept up to #10 AWG stranded wire	Barrier strip screw terminals accept up to #10 AWG stranded wire
Transducers	Two 15" (381mm) high efficiency, extended bass woofer featuring 4" copper voice coils	1.5" (38mm) exit, 3" titanium diaphragm compression driver
Enclosure	Quasi B4 alignment, ported enclosure with fully flared ports, symmetrical port design, tuned to 36 Hz, constructed of MDF and heavily braced. Features vandal resistant woofer mounting bolts	Tilt/Pan Bracket ±10° vertical tilt ±10° horizontal pan
Dimensions (HWD)	36" x 30" x 20.3" (910 mm x 762 mm x 516 mm)	16" x 30" x 20" (406 mm x 762 mm x 508 mm)
Weight – Net	172 lb (78 kg)	40 lb (18.4 kg)
System Weight	212 lb (96.4 kg)	
Baffle Cut-Out	53" x 32"	

1) Maximum input power tested in accordance with IEC 268-5 recommendations, 50 Hz – 20 kHz band limiting, 6 dB signal crest factor.

SC-422

Dimensions

Top

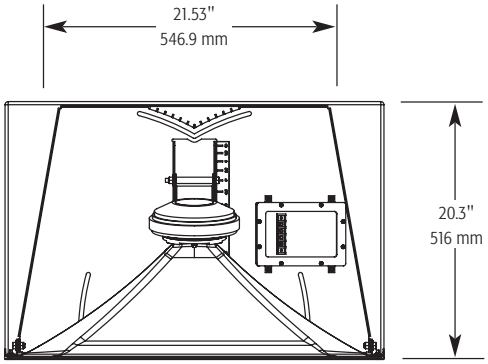

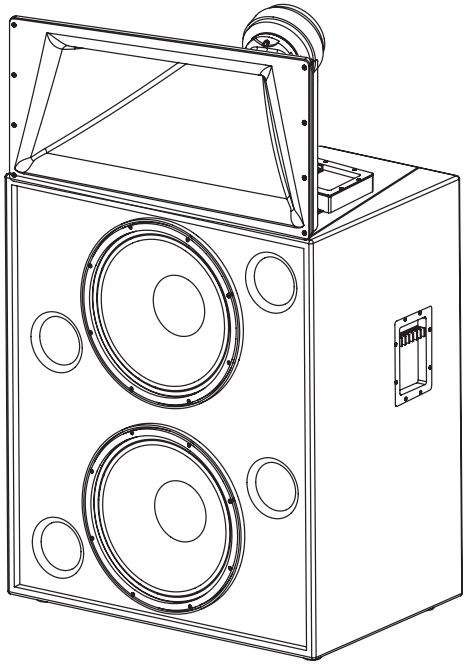

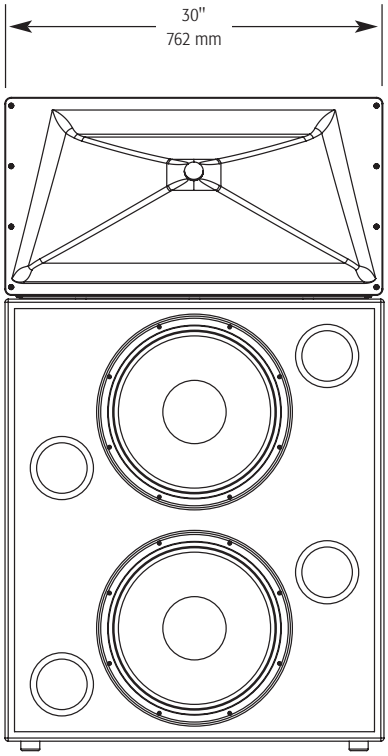

Front

Side

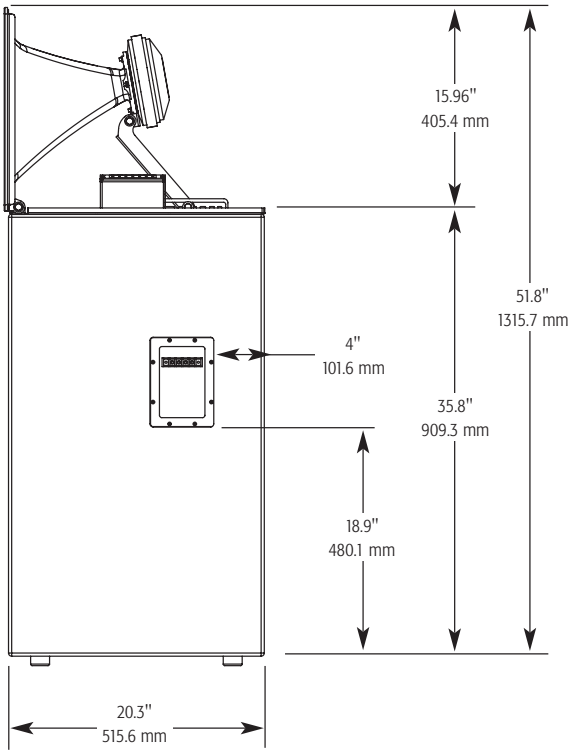

Specifications subject to change without notice.

QSC, and the QSC logo are registered trademarks of QSC Audio Products, LLC in the U.S. Patent and Trademark office and other countries.
THX is a trademark of THX Ltd. All other trademarks are the property of their respective owners. Patents may apply or be pending.

1675 MacArthur Boulevard • Costa Mesa, CA 92626 • Ph: 800/854-4079 or 714/957-7100 • Fax: 714/754-6174

qscaudio.com

SC-422 Spec Sheet – 06/20/08